Soft-Lite® Windows
Bringing quality to light.

10250 Philipp Parkway
Streetsboro, Ohio 44241

L. F. SCHMIDT
LICENSE
No. 43409
STATE OF FLORIDA
PROFESSIONAL ENGINEER

This item has been digitally signed and sealed by **L. F. Schmidt, P.E.** on the date adjacent to the seal.

Printed copies of this document are not considered signed and sealed and the signature must be verified on any electronic copies.

THIS PRODUCT APPROVAL IS VALID ONLY FOR THE STATE OF FLORIDA

"BARCELONA"
Model "DH30I"
DOUBLE HUNG WINDOW
"IMPACT"

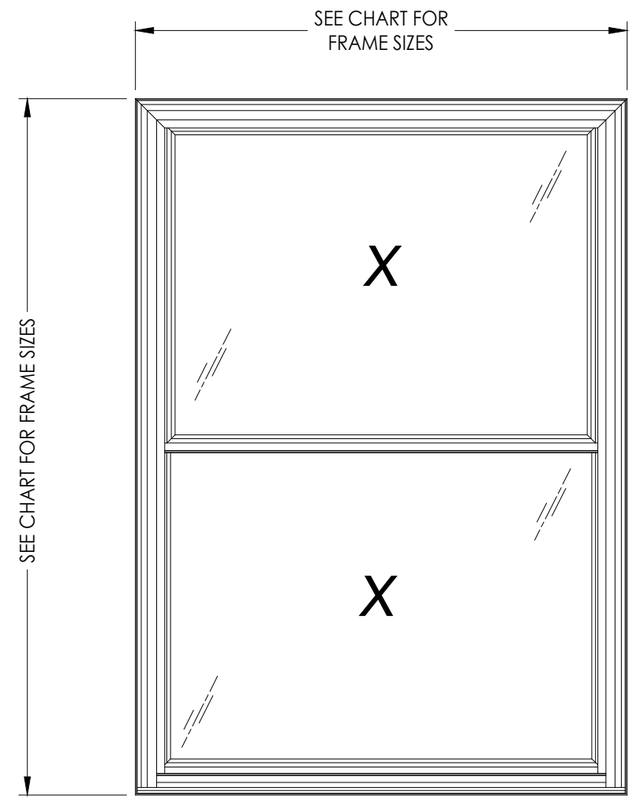

GENERAL NOTES

1. This product has been evaluated and is in compliance with the 8th Edition (2023) Florida Building Code (FBC) structural requirements excluding the "High Velocity Hurricane Zone" (HVHZ).

2. Product anchors shall be as listed and spaced as shown on details. Anchor embedment to base material shall be beyond wall dressing or stucco.

3. When used in areas requiring wind borne debris protection this product complies with FBC Sections 1609.1.2 & R301.2.1.2 and does not require an impact resistant covering. This product meets missile level "C" and excludes Wind Zones 3 & 4 as defined in ASTM E1996 and FBC Sections 1609.1.2.2 & R301.2.1.2.1.

4. For 2x stud framing construction, anchoring of these units shall be the same as that shown for 2x buck masonry construction.

5. Site conditions that deviate from the details of this drawing require further engineering analysis by a licensed engineer or registered architect.

MAX. FRAME DIMENSION	MAX. D.L.O. DIMENSION	GLASS TYPE	DESIGN PRESSURE (PSF)	
			POSITIVE	NEGATIVE
54.0" X 76.5"	46.25" x 33.875"	G1	+50.0	-65.0

TABLE OF CONTENTS

SHEET#	DESCRIPTION
1	Typical elevations, design pressures and general notes
2	Horizontal cross sections
3	Horizontal cross sections
4	Vertical cross sections
5	Buck and frame anchoring
6	Components
7	Components
8	Bill of materials & glazing details

Documents Prepared By:
Lyndon F. Schmidt
P.E. No. 43409

RW BUILDING CONSULTANTS, INC.
P.O. Box 230, Valrico, FL 33595
Phone No.: 813.659.9197
FBPE Registry No. 9813

PRODUCT: SOFT-LITE WINDOWS

PART OR ASSEMBLY: TYPICAL ELEVATION, DESIGN PRESSURES & GENERAL NOTES

REVISIONS

NO.	DATE		BY
4	7/03/23	UPDATE TO 8TH ED. (2023) FBC	LFS
3	1/31/22	REVISE GLAZING DETAILS	LFS
2	7/13/20	UPDATE TO 7TH ED. (2020) FBC	FLS
1	11/12/18	ADD ALTERNATE ENDUR SPACER	LFS

DATE: 4/14/17
SCALE: N.T.S.
DWG. BY: JK
CHK. BY: LFS
DRAWING NO.: FL-15780.6
SHEET 1 OF 8

© 2017 R.W. BUILDING CONSULTANTS INC.

G:\2023 FBC DRAWINGS\Soft-Lite\FL-15780 R13\FL-15780.6-8.dwg

Hardware Notes:
1. Locks (2) located on lock rail 10" from each jamb.

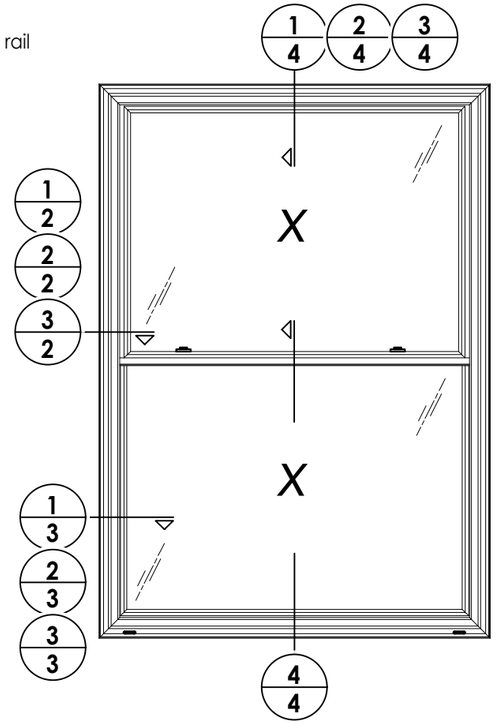

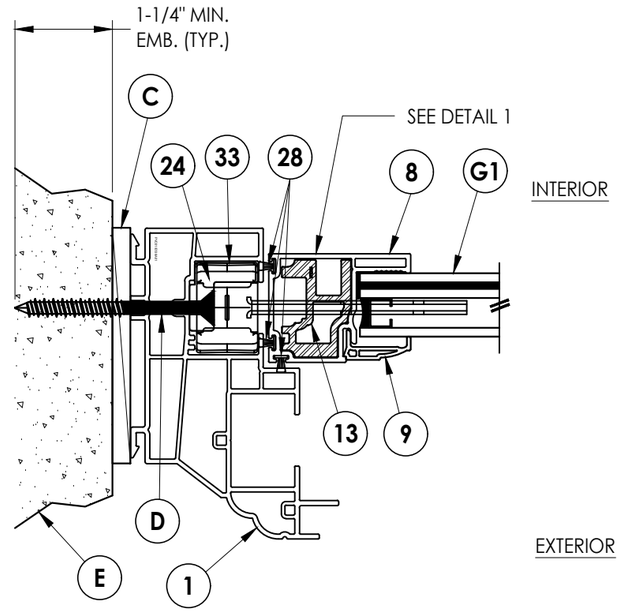

2/2 **HORIZONTAL CROSS SECTION**
Shown Direct to Masonry

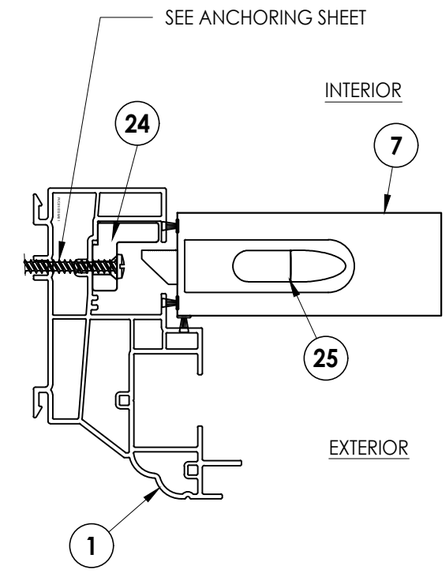

DETAIL 1

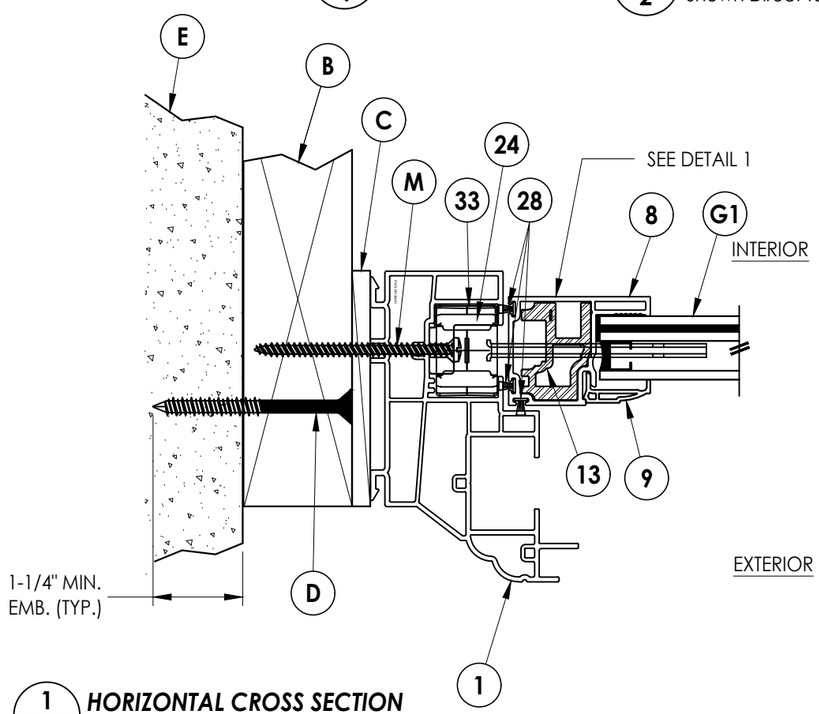

1/2 **HORIZONTAL CROSS SECTION**
2X Buck Construction

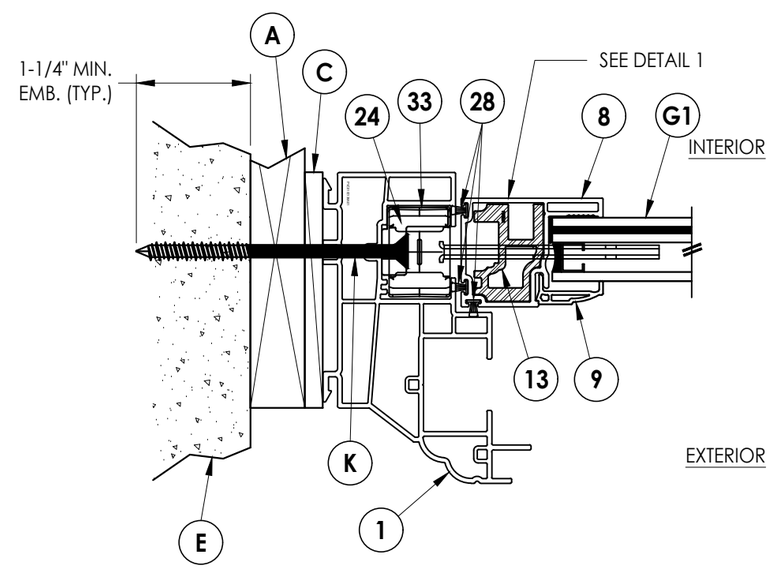

3/2 **HORIZONTAL CROSS SECTION**
Shown w/ 1X Buck

Documents Prepared By:
Lyndon F. Schmidt
P.E. No. 43409

RW BUILDING CONSULTANTS, INC.
P.O. Box 230, Valrico, FL 33595
Phone No.: 813.659.9197
FBPE Registry No. 9813

PRODUCT: SOFT–LITE WINDOWS

PART OR ASSEMBLY: HORIZONTAL CROSS SECTIONS

NO.	DATE	REVISIONS	BY
4	7/03/23	UPDATE TO 8TH ED. (2023) FBC	LFS
3	1/31/22	REVISE GLAZING DETAILS	LFS
2	7/13/20	UPDATE TO 7TH ED. (2020) FBC	FLS
1	11/12/18	ADD ALTERNATE ENDUR SPACER	LFS

DATE: 4/14/17
SCALE: N.T.S.
DWG. BY: JK
CHK. BY: LFS
DRAWING NO.: FL–15780.6
SHEET 2 OF 8

© 2017 R.W. Building Consultants Inc.

G:\2023 FBC DRAWINGS\Soft-Lite\FL-15780 R13\FL-15780.6-8.dwg

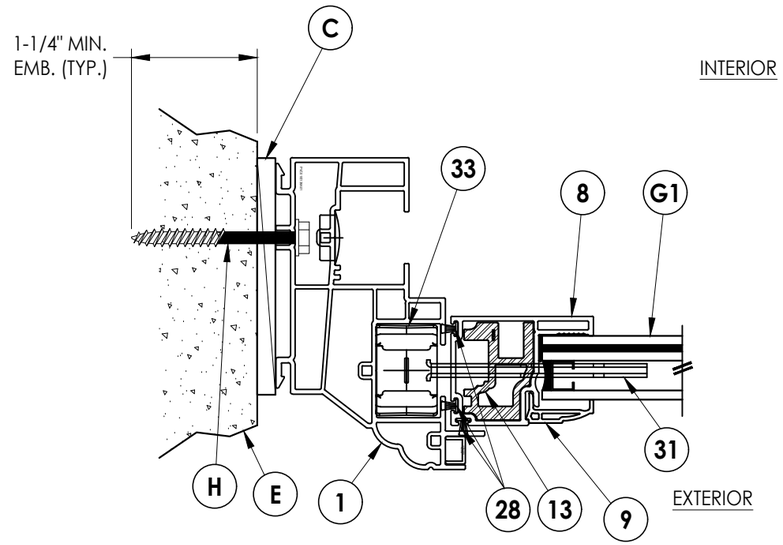

2/3 **HORIZONTAL CROSS SECTION**
Shown Direct to Masonry

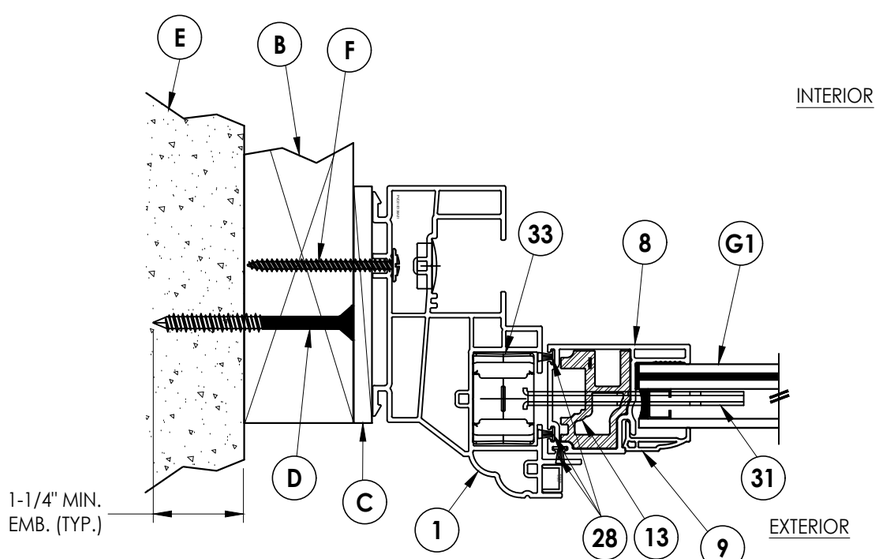

1/3 **HORIZONTAL CROSS SECTION**
2X Buck Construction

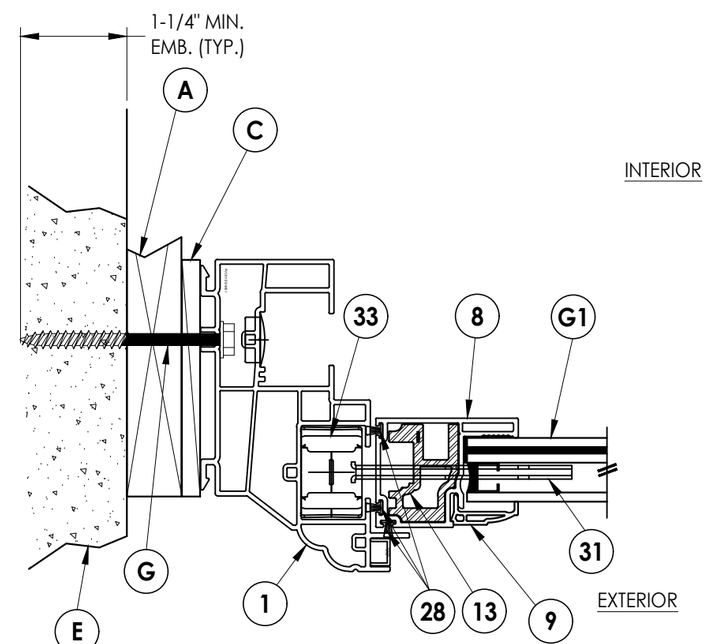

3/3 **HORIZONTAL CROSS SECTION**
Shown w/ 1X Buck

Documents Prepared By:
Lyndon F. Schmidt
P.E. No. 43409

RW BUILDING CONSULTANTS, INC.
P.O. Box 230, Valrico, FL 33595
Phone No.: 813.659.9197
FBPE Registry No. 9813

PRODUCT: SOFT-LITE WINDOWS

PART OR ASSEMBLY: HORIZONTAL CROSS SECTIONS

NO.	DATE	REVISIONS	BY
4	7/03/23	UPDATE TO 8TH ED. (2023) FBC	LFS
3	1/31/22	REVISE GLAZING DETAILS	LFS
2	7/13/20	UPDATE TO 7TH ED. (2020) FBC	FLS
1	11/12/18	ADD ALTERNATE ENDUR SPACER	LFS

DATE: 4/14/17
SCALE: N.T.S.
DWG. BY: JK
CHK. BY: LFS
DRAWING NO.: FL-15780.6
SHEET 3 OF 8

© 2017 R.W. Building Consultants Inc.

G:\2023 FBC DRAWINGS\Soft-Lite\FL-15780 R13\FL-15780.6-8.dwg

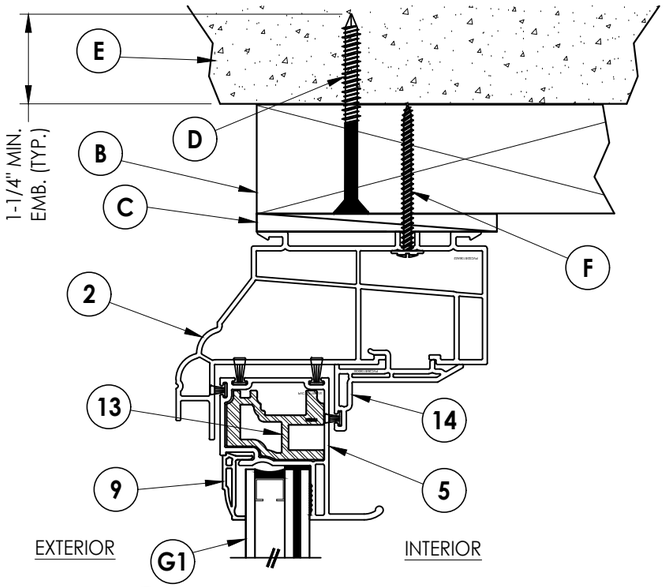

1/4 **VERTICAL CROSS SECTION**
2X Buck Construction

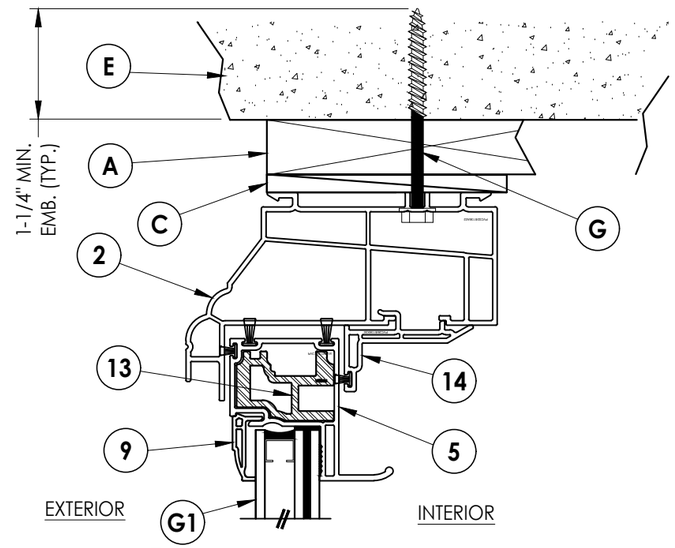

3/4 **VERTICAL CROSS SECTION**
Shown w/ 1X Buck

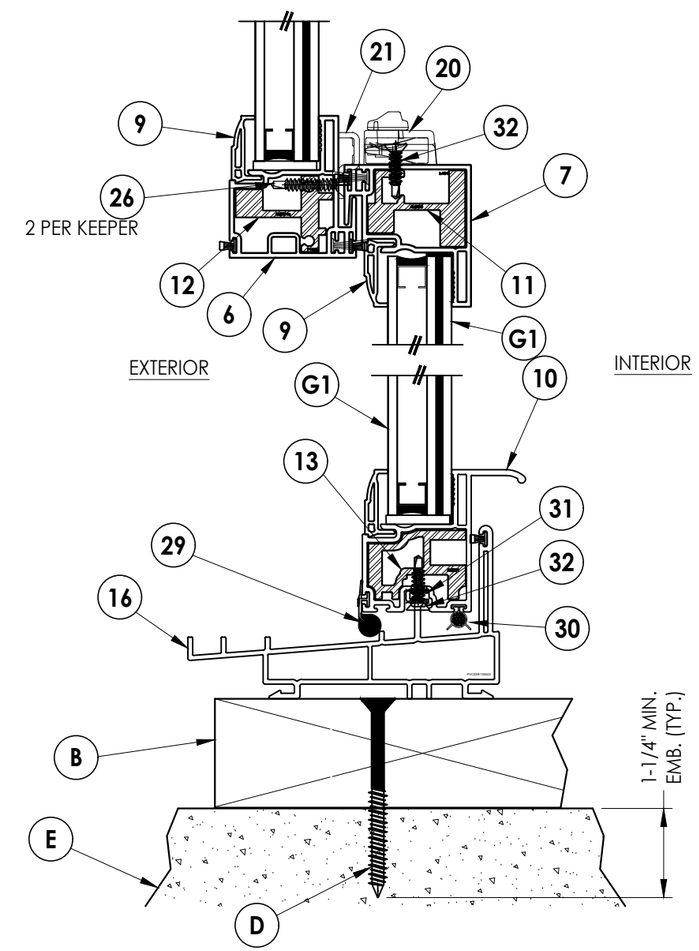

4/4 **VERTICAL CROSS SECTION**
2X Buck Construction
(Shown w/ Sloped Sill)

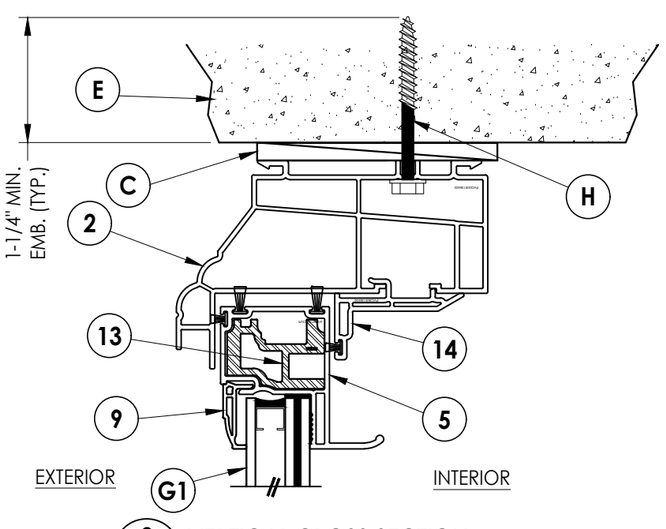

2/4 **VERTICAL CROSS SECTION**
Shown Direct to Masonry

Documents Prepared By:
Lyndon F. Schmidt
P.E. No. 43409

RW BUILDING CONSULTANTS, INC.
P.O. Box 230, Valrico, FL 33595
Phone No.: 813.659.9197
FBPE Registry No. 9813

PRODUCT: SOFT–LITE WINDOWS

PART OR ASSEMBLY: VERTICAL CROSS SECTIONS

REVISIONS

NO.	DATE		BY
4	7/03/23	UPDATE TO 8TH ED. (2023) FBC	LFS
3	1/31/22	REVISE GLAZING DETAILS	LFS
2	7/13/20	UPDATE TO 7TH ED. (2020) FBC	FLS
1	11/12/18	ADD ALTERNATE ENDUR SPACER	LFS

DATE: 4/14/17
SCALE: N.T.S.
DWG. BY: JK
CHK. BY: LFS
DRAWING NO.: FL–15780.6
SHEET 4 OF 8

© 2017 R.W. Building Consultants Inc.

G:\2023 FBC DRAWINGS\Soft-Lite\FL-15780 R13\FL-15780.6-8.dwg

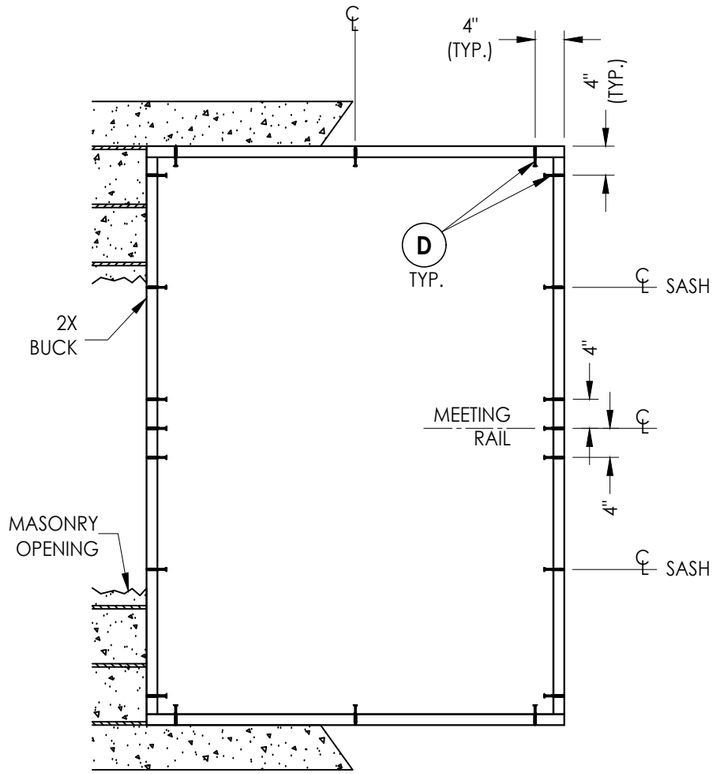

BUCK ANCHORING

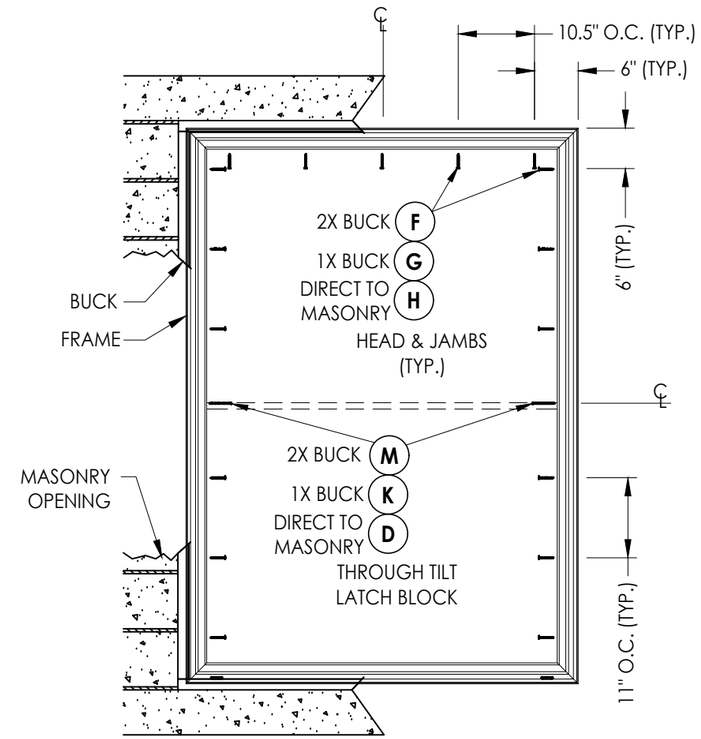

FRAME ANCHORING

CONCRETE ANCHOR NOTES:

1. *Concrete anchor locations at the corners may be adjusted to maintain the min. edge distance to mortar joints.*
2. *Concrete anchor locations noted as "MAX. ON CENTER" must be adjusted to maintain the min. edge distance to mortar joints, additional concrete anchors may be required to ensure the "MAX. ON CENTER" dimension are not exceeded.*
3. *Concrete anchor table:*

ANCHOR TYPE	ANCHOR SIZE	MIN. EMBEDMENT	MIN. CLEARANCE TO MASONRY EDGE	MIN. CLEARANCE TO ADJACENT ANCHOR
ITW TAPCON®	1/4"	1-1/4"	2"	4"
DeWALT ULTRACON+®	1/4"	1-1/4"	1"	4"

WOOD SCREW INSTALLATION NOTES:

1. *Maintain a minimum 5/8" edge distance, 1" end distance, & 1" o.c. spacing of wood screws to prevent the splitting of wood.*

Documents Prepared By:
Lyndon F. Schmidt
P.E. No. 43409
RW BUILDING CONSULTANTS, INC.
P.O. Box 230, Valrico, FL 33595
Phone No.: 813.659.9197
FBPE Registry No. 9813

PRODUCT: SOFT-LITE WINDOWS

PART OR ASSEMBLY: BUCK AND FRAME ANCHORING

NO.	DATE	BY	REVISIONS
4	7/03/23	LFS	UPDATE TO 8TH ED. (2023) FBC
3	1/31/22	LFS	REVISE GLAZING DETAILS
2	7/13/20	FLS	UPDATE TO 7TH ED. (2020) FBC
1	11/12/18	LFS	ADD ALTERNATE ENDUR SPACER

DATE: 4/14/17
SCALE: N.T.S.
DWG. BY: JK
CHK. BY: LFS
DRAWING NO.: FL-15780.6
SHEET 5 OF 8

© 2017 R.W. BUILDING CONSULTANTS INC.

G:\2023 FBC DRAWINGS\Soft-Lite\FL-15780 R13\FL-15780.6-8.dwg

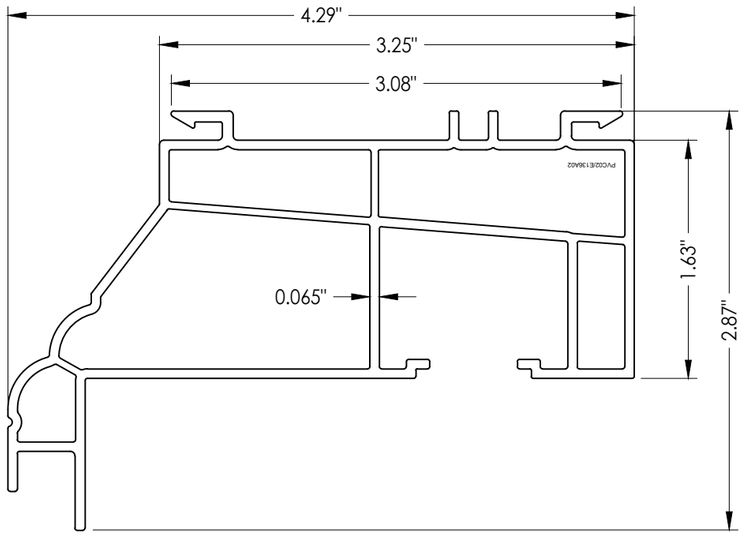

2 HEAD

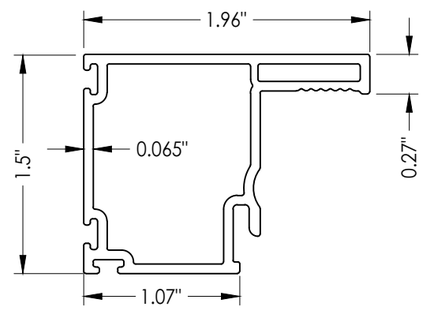

8 PLAIN STILE

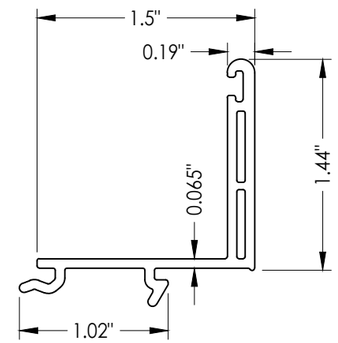

4 SILL ADAPTER

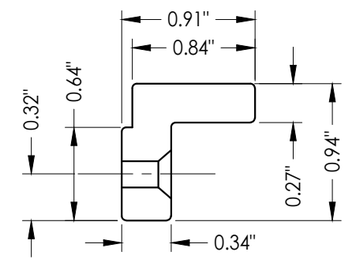

24 TILT LATCH BLOCK

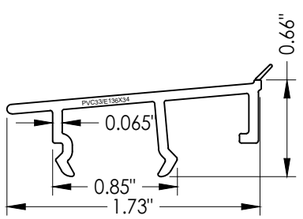

15 SLOPED INSERT

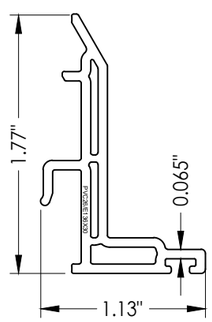

14 HEAD POCKET INSERT

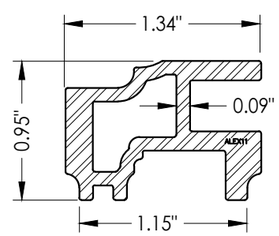

13 REINFORCEMENT

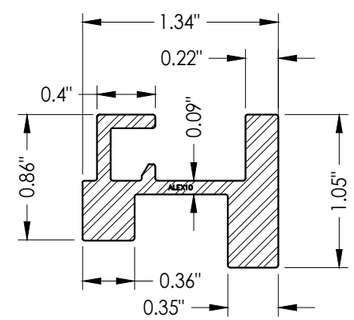

11 REINFORCEMENT

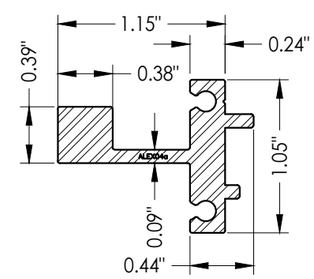

12 REINFORCEMENT

Documents Prepared By:
Lyndon F. Schmidt
P.E. No. 43409

RW BUILDING CONSULTANTS, INC.
P.O. Box 230, Valrico, FL 33595
Phone No.: 813.659.9197
FBPE Registry No. 9813

PRODUCT: SOFT-LITE WINDOWS

PART OR ASSEMBLY: COMPONENTS

NO.	DATE	REVISIONS	BY
4	7/03/23	UPDATE TO 8TH ED. (2023) FBC	LFS
3	1/31/22	REVISE GLAZING DETAILS	LFS
2	7/13/20	UPDATE TO 7TH ED. (2020) FBC	FLS
1	11/12/18	ADD ALTERNATE ENDUR SPACER	LFS

DATE: 4/14/17
SCALE: N.T.S.
DWG. BY: JK
CHK. BY: LFS
DRAWING NO.: FL-15780.6
SHEET 6 OF 8

© 2017 R.W. Building Consultants Inc.

G:\2023 FBC DRAWINGS\Soft-Lite\FL-15780 R13\FL-15780.6-8.dwg

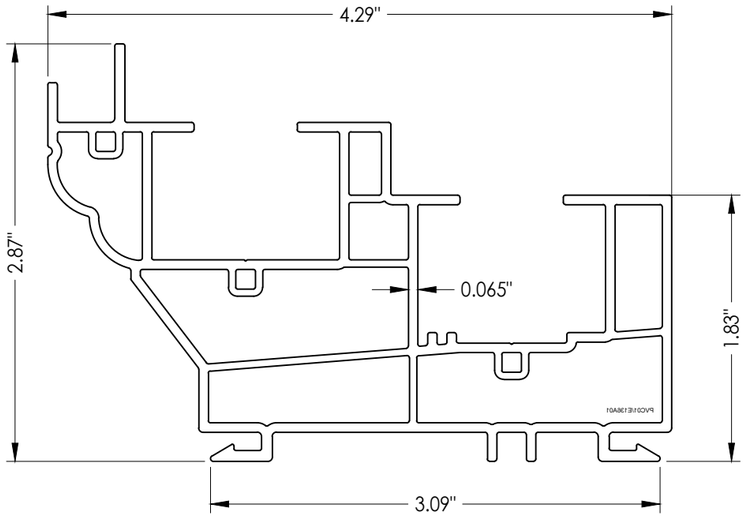

1 FRAME

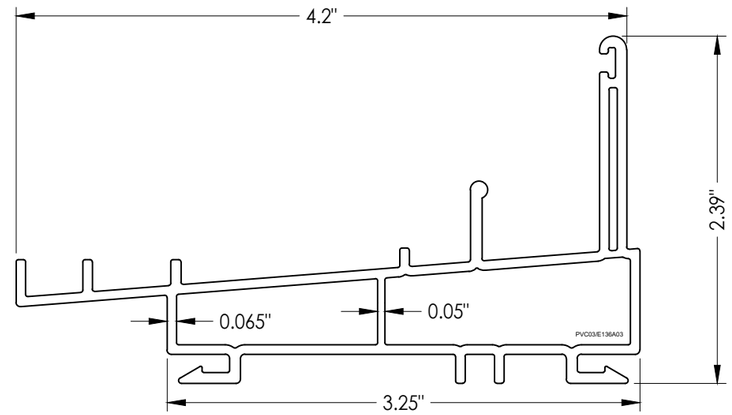

3 SLOPED SILL

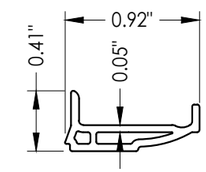

9 GLAZING BEAD

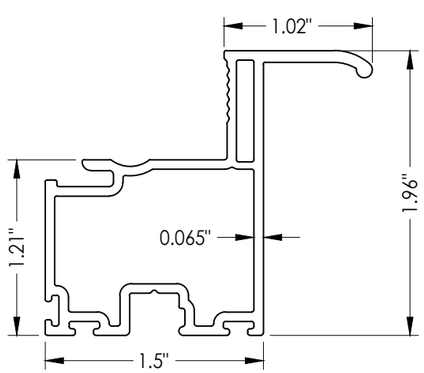

10 LIFT RAIL

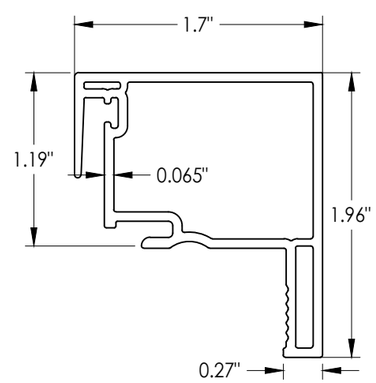

7 LOCK RAIL

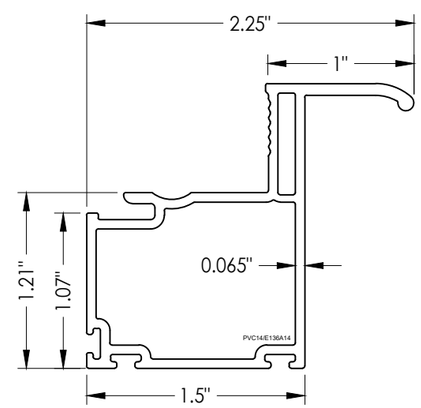

5 LIFT RAIL

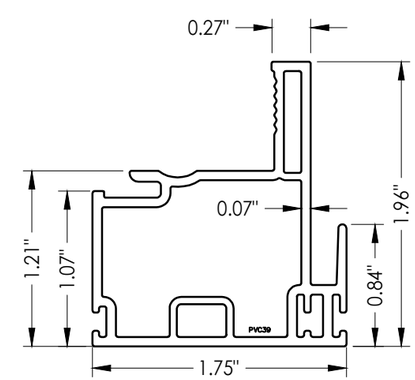

6 KEEPER RAIL

Documents Prepared By:
Lyndon F. Schmidt
P.E. No. 43409

RW BUILDING CONSULTANTS, INC.
P.O. Box 230, Valrico, FL 33595
Phone No.: 813.659.9197
FBPE Registry No. 9813

PRODUCT: SOFT–LITE WINDOWS

PART OR ASSEMBLY: COMPONENTS

NO.	DATE	REVISIONS	BY
4	7/03/23	UPDATE TO 8TH ED. (2023) FBC	LFS
3	1/31/22	REVISE GLAZING DETAILS	LFS
2	7/13/20	UPDATE TO 7TH ED. (2020) FBC	FLS
1	11/12/18	ADD ALTERNATE ENDUR SPACER	LFS

DATE: 4/14/17
SCALE: N.T.S.
DWG. BY: JK
CHK. BY: LFS
DRAWING NO.: FL–15780.6
SHEET 7 OF 8

© 2017 R.W. BUILDING CONSULTANTS INC.

G:\2023 FBC DRAWINGS\Soft-Lite\FL-15780 R13\FL-15780.6-8.dwg

BILL OF MATERIALS

ITEM #		MATERIAL
A	1X BUCK SG >= 0.42	WOOD
B	2X BUCK SG >= 0.42	WOOD
C	1/4" MAX. SHIM SPACE	-
D	1/4" X 2-3/4" PFH DeWALT OR ITW CONCRETE SCREW	STEEL
E	MASONRY - 3,000 PSI MIN. CONCRETE CONFORMING TO ACI 301 OR HOLLOW BLOCK CONFORMING TO ASTM C90	CONCRETE
F	#8-15 X 2" TRUSS HEAD SMS (1-3/8" MIN. EMBEDMENT)	STEEL
G	1/4" X 2-3/4" HWH DeWALT OR ITW CONCRETE SCREW	STEEL
H	1/4" X 2-1/4" HWH DeWALT OR ITW CONCRETE SCREW	STEEL
K	1/4" X 3-1/4" PFH DeWALT OR ITW CONCRETE SCREW	STEEL
M	#10 X 2-3/4" PPH WS (1-3/8" MIN. EMBEDMENT)	STEEL
1	FRAME*	PVC
2	HEAD*	PVC
3	WEEP HOLE COVER*	PVC
4	SILL ADAPTER*	PVC
5	TOP LIFT HANDLE*	PVC
6	KEEPER RAIL*	PVC
7	LOCK RAIL*	PVC
8	PLAIN STILE*	PVC
9	GLAZING BEAD*	PVC
10	BOTTOM LIFT RAIL*	PVC
11	REINFORCEMENT (6065-T5 ALUM)	ALUM.
12	REINFORCEMENT (6065-T5 ALUM)	ALUM.
13	REINFORCEMENT (6065-T5 ALUM)	ALUM.
14	HEAD POCKET INSERT*	PVC
15	SLOPED INSERT*	PVC
16	SLOPED SILL*	PVC
20	LOCK	-
21	LOCK KEEPER	-
24	TILT LATCH BLOCK	-
25	TILT LATCH	-
26	#8 X 1" PFH TEK	STEEL
27	#6 X 1" PFH TEK	STEEL
28	WEATHERSTRIP (187-270 TRI-FIN)	-
29	BULB SEAL	-
30	BULB SEAL	-
31	PIVOT BAR	STEEL
32	#7 X 3/4" PFH TEK	STEEL
33	BALANCER BRACKET	-

* THE APPROVED WHITE RIGID PVC EXTERIOR EXTRUSIONS FOR WINDOWS ARE TO BE PRODUCED BY EXTRUDERS LICENSEES IN "AAMA CERTIFICATIONS PROGRAMS FOR RIGID PVC EXTRUSIONS".

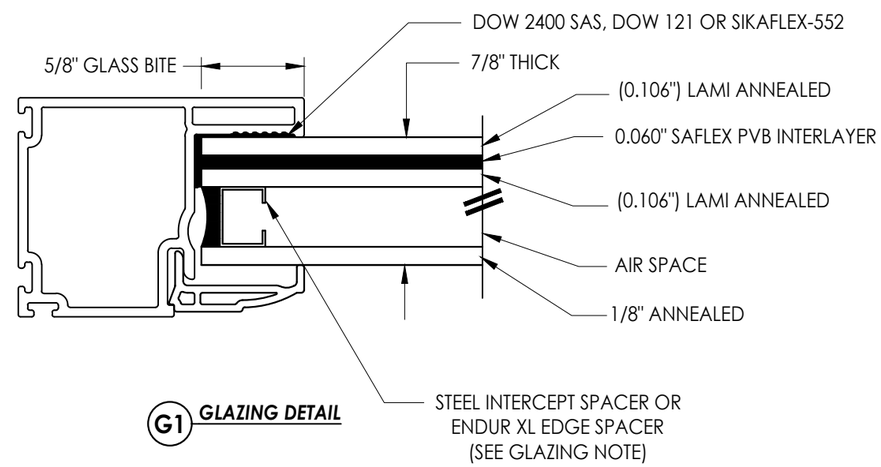

G1 GLAZING DETAIL

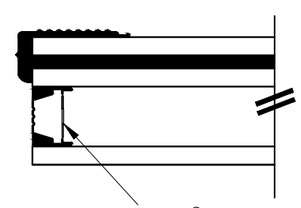

ENDUR XL EDGE®SPACER
(CARDINAL GLASS)

GLAZING NOTE:
THE ENDUR STAINLESS STEEL XL EDGE®SPACER MAY BE USED AS A SUBSTITUTE SPACER IN THE GLAZING DETAIL SHOWN.

Documents Prepared By:
Lyndon F. Schmidt
P.E. No. 43409

RW BUILDING CONSULTANTS, INC.
P.O. Box 230, Valrico, FL 33595
Phone No.: 813.659.9197
FBPE Registry No. 9813

PRODUCT: SOFT-LITE WINDOWS

PART OR ASSEMBLY: BILL OF MATERIALS AND GLAZING DETAIL

NO.	DATE	REVISIONS	BY
4	7/03/23	UPDATE TO 8TH ED. (2023) FBC	LFS
3	1/31/22	REVISE GLAZING DETAILS	LFS
2	7/13/20	UPDATE TO 7TH ED. (2020) FBC	FLS
1	11/12/18	ADD ALTERNATE ENDUR SPACER	LFS

DATE: 4/14/17
SCALE: N.T.S.
DWG. BY: JK
CHK. BY: LFS
DRAWING NO.: FL-15780.6
SHEET 8 OF 8

© 2017 R.W. BUILDING CONSULTANTS INC.

G:\2023 FBC DRAWINGS\Soft-Lite\FL-15780 R13\FL-15780.6-8.dwg